Work Order ID 52018

September 11, 2009 1:25:40 PM

Item ID: D3325-041
Revision ID: B
Item Name: Basket Lid Assembly

Accept

Setup **Start**
Stop

Start Date: 09/14/2009 **Start Qty:** 1.00
Required Date: 09/23/2009 **Req'd Qty:** 1.00
Reference:

Cust Item ID:
Customer:

Approvals: **Process Plan:** MF **Date:** 09-09-11 **Tooling:** **Date:**
QC: **Date:** **SPC (Y/N):** **Date:**

Run **Start**
Stop

Sequence ID/ Work Center ID	Operation Description	Set Up/ Run Hours	Draw Number	Draw Rev.	Plan Code	Accept Qty	Reject Qty	Reject Number	Insp. Stamp
Draw Nbr: D3325	Revision Nbr: Rev B								
100	Large Fab	0.00							
Large Fab		0.00							
Large Fab									

SAD 09-09-15

Memo

1-Cut tubes as per Dwg D3325

Qty☐Part Number☐ Description☐ Batch
2☐D3325-1☐EndTube☐ B109385
3☐D3325-3☐Interior Tube☐ B109385
2☐D3325-5☐Full Lengh Tube ☐ B 109385

Identify parts appropriately

(PTO) →

2-Remove all markings from material ✓

3-Drill and Weld as per Dwg D3325 & QSI 004
A/R☐4130☐Steel Rod☐ M100075

09/09/16 lx

4-Deburr as required

Dart Aerospace Ltd

W/O:		WORK ORDER CHANGES					
DATE	**STEP**	**PROCEDURE CHANGE**	**By**	**Date**	**Qty**	**Approval** Chief Eng / Prod Mgr	**Approval** QC Inspector

Part No: D3325-041 **PAR #:** _____ **Fault Category:** Prod. Large Fab. **NCR:** (Yes) No **DQA:** _____ **Date:** 05.10.05

Resolution: Re-work **Disposition:** Re-work **QA: N/C Closed:** _____ **Date:** 05.10.05

NCR: 52018		WORK ORDER NON-CONFORMANCE (NCR)						
DATE	**STEP**	**Description of NC** Section A	**Corrective Action** Section B			**Verification** Section C	**Approval** Chief Eng	**Approval** QC Inspector
			Initial Chief Eng	**Action Description** Chief Eng	**Sign & Date**			
9/9/18	100	Found During inspection that the Lid was welded inverted from the Base. The center x-beam + Placard Plate are of from the center beam of the Base.	RSIMZ	Remove the center tube & grind flush. Re-weld a new one into it's correct position. D 3352-1 B 41925 1x D 3325-3 B 19385 1x	09/09/18	09/09/18	RSIMZ	09/09/18
		RO welder wasn't paying attention to the Dwg. During welding. LPA. → L.O.A.	RSIMZ	Re weld A/C# M100075 per QS1004		09/09/18	RSIMZ	09/09/18

NOTE: Date & initial all entries

H:\fFORMS\Quality Assurance\approved QA\NCRWO RevE

Work Order ID 52018

September 11, 2009 1:25:40 PM

Item ID: D3325-041
Revision ID: B
Item Name: Basket Lid Assembly

Accept

Setup **Start**
Stop

Start Date: 09/14/2009 **Start Qty:** 1.00
Required Date: 09/23/2009 **Req'd Qty:** 1.00
Reference:

Cust Item ID:
Customer:

Approvals: **Process Plan:** _____ **Date:** _____ **Tooling:** _____ **Date:** _____
QC: _____ **Date:** _____ **SPC (Y/N):** _____ **Date:** _____

Run **Start**
Stop

Sequence ID/ Work Center ID	Operation Description	Set Up/ Run Hours	Draw Number	Draw Rev.	Plan Code	Accept Qty	Reject Qty	Reject Number	Insp. Stamp
110	QC9- Inspect visual per QSI004- Fusion Welds	0.00							
QC	**Memo**	0.00	02/09/18						
Quality Control									
120	QC5- Inspect part completeness to step on W/O	0.00							
QC	**Memo**	0.00	02/02/18			(X)			
Quality Control									
121	Pressure Wash per QSI005 4.3	0.00							
HandFinish	**Memo**	0.00	02/02/21			(X)			
Hand Finishing									

Dart Aerospace Ltd

W/O:		WORK ORDER CHANGES					
DATE	STEP	PROCEDURE CHANGE	By	Date	Qty	Approval Chief Eng / Prod Mgr	Approval QC Inspector

Part No: _____ **PAR #:** _____ **Fault Category:** _____ **NCR:** Yes No **DQA:** _____ **Date:** _____

Resolution: _____ **Disposition:** _____ **QA: N/C Closed:** _____ **Date:** _____

NCR:		WORK ORDER NON-CONFORMANCE (NCR)						
DATE	STEP	Description of NC Section A	Corrective Action Section B			Verification Section C	Approval Chief Eng	Approval QC Inspector
			Initial Chief Eng	Action Description Chief Eng	Sign & Date			

NOTE: Date & initial all entries

H:\fFORMS\Quality Assurance\approved QA\NCRWO RevE

Work Order ID 52018

September 11, 2009 1:25:40 PM

Item ID: D3325-041
Revision ID: B
Item Name: Basket Lid Assembly

Accept

Setup **Start**
Stop

Start Date: 09/14/2009 **Start Qty:** 1.00
Required Date: 09/23/2009 **Req'd Qty:** 1.00
Reference:

Cust Item ID:
Customer:

Run **Start**
Stop

Approvals: **Process Plan:** _____ **Date:** _____ **Tooling:** _____ **Date:** _____
QC: _____ **Date:** _____ **SPC (Y/N):** _____ **Date:** _____

Sequence ID/ Work Center ID	Operation Description	Set Up/ Run Hours	Draw Number	Draw Rev.	Plan Code	Accept Qty	Reject Qty	Reject Number	Insp. Stamp
130	White Gloss(Ref:4.3.5.1) per QSI005 4.3-Alum	0.00							
Powdercoat									
Powder Coating	**Memo**	0.00							
	1ST COAT: START TIME: 10:15 OVEN TEMPERATURE: 400 °F FINISH TIME: 11:15								
	********** 2nd coat if necessary**********								
	2ND COAT: START TIME: 11:00 OVEN TEMPERATURE: 400 °F FINISH TIME: 11:30								
140	QC3- Inspect Part Finish	0.00							
QC	**Memo**	0.00							
Quality Control									

M112260

Mfg 04/04/21 (12)

09/09/24 ©

Dart Aerospace Ltd

W/O:		WORK ORDER CHANGES					
DATE	STEP	PROCEDURE CHANGE	By	Date	Qty	Approval Chief Eng / Prod Mgr	Approval QC Inspector

Part No: _____ **PAR #:** _____ **Fault Category:** _____ **NCR:** Yes No **DQA:** _____ **Date:** _____

Resolution: _____ **Disposition:** _____ **QA: N/C Closed:** _____ **Date:** _____

NCR:		WORK ORDER NON-CONFORMANCE (NCR)						
DATE	STEP	Description of NC Section A	Corrective Action Section B			Verification Section C	Approval Chief Eng	Approval QC Inspector
			Initial Chief Eng	Action Description Chief Eng	Sign & Date			

NOTE: Date & initial all entries

H:\fFORMS\Quality Assurance\approved QA\NCRWO RevE

Work Order ID 52018

September 11, 2009 1:25:40 PM

Item ID: D3325-041
Revision ID: B
Item Name: Basket Lid Assembly

Accept

Setup **Start**
Stop

Start Date: 09/14/2009 **Start Qty:** 1.00
Required Date: 09/23/2009 **Req'd Qty:** 1.00
Reference:

Cust Item ID:
Customer:

Run **Start**
Stop

Approvals: **Process Plan:** _____ **Date:** _____ **Tooling:** _____ **Date:** _____
QC: _____ **Date:** _____ **SPC (Y/N):** _____ **Date:** _____

Sequence ID/ Work Center ID	Operation Description	Set Up/ Run Hours	Draw Number	Draw Rev.	Plan Code	Accept Qty	Reject Qty	Reject Number	Insp. Stamp
150	Identify as per dwg & Stock Location:_____	0.00	PAP5 1993			9/9/25			SO
Packaging	Memo	0.00							
Packaging									
160	QC21- Final Inspection - Work Order Release	0.00							
QC	Memo	0.00							
Quality Control									

09/09/28

09-09-28

Dart Aerospace Ltd

W/O:		WORK ORDER CHANGES					
DATE	STEP	PROCEDURE CHANGE	By	Date	Qty	Approval Chief Eng / Prod Mgr	Approval QC Inspector

Part No: _____ PAR #: _____ Fault Category: _____ NCR: Yes No DQA: _____ Date: _____

Resolution: _____ Disposition: _____ QA: N/C Closed: _____ Date: _____

NCR:		WORK ORDER NON-CONFORMANCE (NCR)						
DATE	STEP	Description of NC Section A	Corrective Action Section B			Verification Section C	Approval Chief Eng	Approval QC Inspector
			Initial Chief Eng	Action Description Chief Eng	Sign & Date			

NOTE: Date & initial all entries

H:\fFORMS\Quality Assurance\approved QA\NCRWO RevE

Picklist Print

September 11, 2009 1:25:39 PM

Work Order ID: 52018

Parent Item: D3325-041RevB

Parent Item Name: Basket Lid Assembly

Comments:

Start Date: 09/14/2009 **Required Date:** 09/23/2009

Start Qty: 1.00 **Required Qty:** 1.00

Component Item ID/ Item Name	Replacement Item ID	Mfg/ Purch	Bin Item	Primary Location	Last Location	Route Seq ID	Unit of Measure	Qty on Hand	Remaining Qty To Pick	Qty Issued	Date Issued	Status
D3328-1RevB Basket Hinge		Manufactured	No			100	Each	35.0000	2.0000			
				Warehouse Location		**Loc Qty**		**Loc Code**				
				Main Warehouse								
				ST			35					
					33871		35			2x	DJ 09/09/16	
D3349-1RevA Spacer Bushing		Manufactured	No			100	Each	40.0000	2.0000			
				Warehouse Location		**Loc Qty**		**Loc Code**				
				Main Warehouse								
				ST			40					
					34205		10			2x	DJ 09/09/16	
					44401		30					
D3352-1RevA Label Plate		Manufactured	No			100	Each	21.0000	1.0000			
				Warehouse Location		**Loc Qty**		**Loc Code**				
				Main Warehouse								
				ST			21					
					41925		21			1x	DJ 09/09/16	

Dart Aerospace Ltd

W/O:		WORK ORDER CHANGES					
DATE	STEP	PROCEDURE CHANGE	By	Date	Qty	Approval Chief Eng / Prod Mgr	Approval QC Inspector

Part No: _____ **PAR #:** _____ **Fault Category:** _____ **NCR:** Yes No **DQA:** _____ **Date:** _____

Resolution: _____ **Disposition:** _____ **QA: N/C Closed:** _____ **Date:** _____

NCR:		WORK ORDER NON-CONFORMANCE (NCR)						
DATE	STEP	Description of NC Section A	Corrective Action Section B			Verification Section C	Approval Chief Eng	Approval QC Inspector
			Initial Chief Eng	Action Description Chief Eng	Sign & Date			

NOTE: Date & initial all entries

H:\fFORMS\Quality Assurance\approved QA\NCRWO RevE

Picklist Print

September 11, 2009 1:25:39 PM

Work Order ID: 52018

Parent Item: D3325-041RevB

Parent Item Name: Basket Lid Assembly

Comments:

Start Date: 09/14/2009 **Required Date:** 09/23/2009

Start Qty: 1.00 **Required Qty:** 1.00

Component Item ID/ Item Name	Replacement Item ID	Mfg/ Purch	Bin Item	Primary Location	Last Location	Route Seq ID	Unit of Measure	Qty on Hand	Remaining Qty To Pick	Qty Issued	Date Issued	Status
D3367-1RevA Mounting Bracket		Manufactured	No			100	Each	47.0000	2.0000			
M4130NTS0.500W.035 4130 Square tube .500 x .500 x .035w		Purchased	No			100	f	330.1931	21.6227			

Warehouse Location	Loc Qty	Loc Code
Main Warehouse		
ST	47	
43228	47	

2x LY 09/09/16

SAD 09-09-15

Warehouse Location	Loc Qty	Loc Code
Main Warehouse		
MAT	330.1931	
109127	196.8684	
109385	133.3247	

21.6227

Dart Aerospace Ltd

W/O:		WORK ORDER CHANGES					
DATE	STEP	PROCEDURE CHANGE	By	Date	Qty	Approval Chief Eng / Prod Mgr	Approval QC Inspector

Part No: _____ **PAR #:** _____ **Fault Category:** _____ **NCR:** Yes No **DQA:** _____ **Date:** _____

Resolution: _____ **Disposition:** _____ **QA: N/C Closed:** _____ **Date:** _____

NCR:		WORK ORDER NON-CONFORMANCE (NCR)						
DATE	STEP	Description of NC Section A	Corrective Action Section B			Verification Section C	Approval Chief Eng	Approval QC Inspector
			Initial Chief Eng	Action Description Chief Eng	Sign & Date			

NOTE: Date & initial all entries

H:\fFORMS\Quality Assurance\approved QA\NCRWO RevE

SHOP COPY
RETURN TO
ENGINEERING
UNCONTROLLED COPY
SUBJECT TO AMENDMENT
WITHOUT NOTICE
WORK ORDER
NO. 52018.
MF
09-09-11

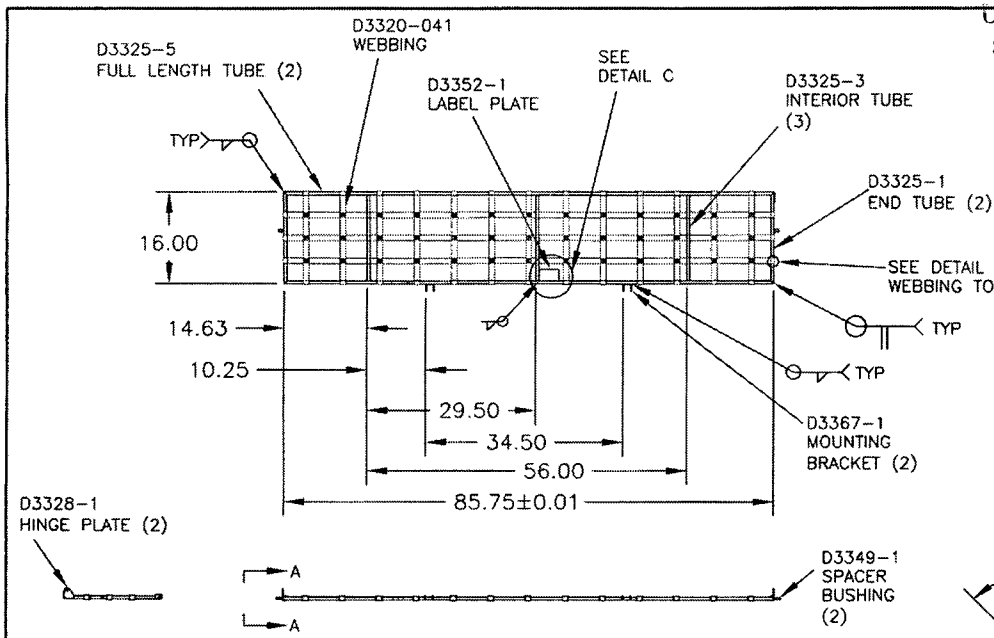

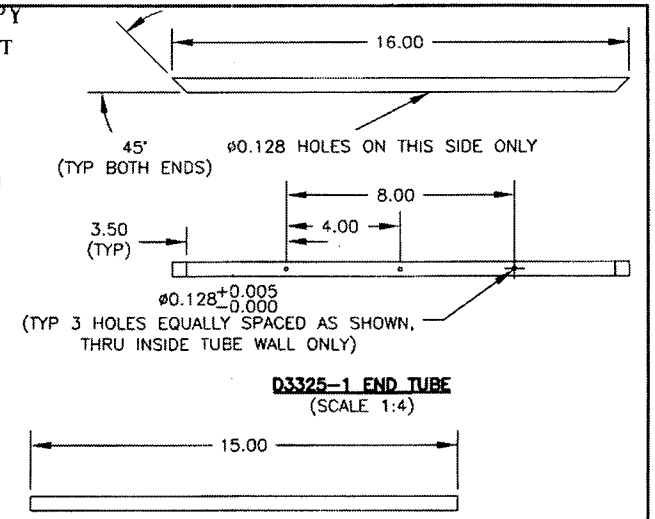

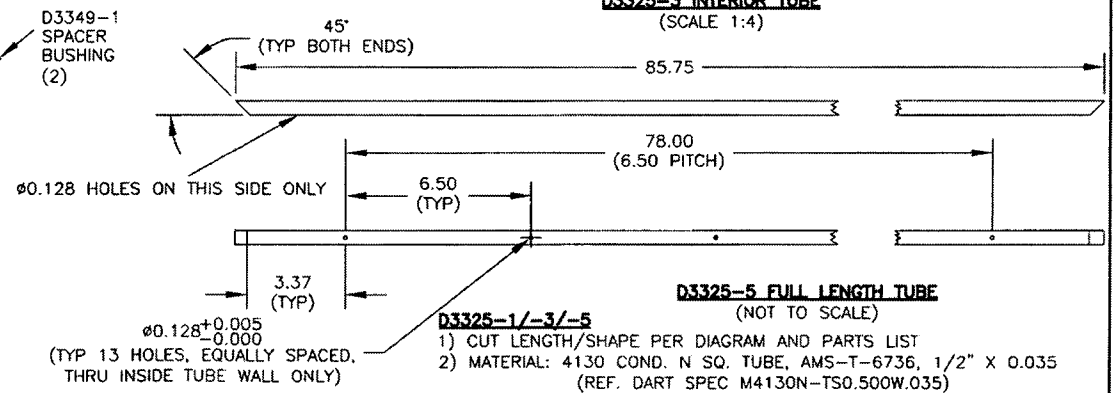

D3325-041 BASKET LID ASSEMBLY

1) FINISH: POWDER COAT ASSEMBLY WHITE (4.3.5.2) PER DART QSI 005 4.3 (PRIOR TO INSTALLATION OF D3320-041)
2) WELD PER DART QSI 004
3) ALL DIMENSIONS ARE IN INCHES
4) ALL TOLERANCES ARE PER DART QSI 018 UNLESS OTHERWISE NOTED

D3325-5 FULL LENGTH TUBE
(NOT TO SCALE)

D3325-1/-3/-5

1) CUT LENGTH/SHAPE PER DIAGRAM AND PARTS LIST
2) MATERIAL: 4130 COND. N SQ. TUBE, AMS-T-6736, 1/2" X 0.035 (REF. DART SPEC M4130N-TS0.500W.035)
3) ALL DIMENSIONS ARE IN INCHES
4) ALL TOLERANCES ARE PER DART QSI 018 UNLESS OTHERWISE NOTED

PARTS LIST FOR D3325-041 BASKET LID ASSEMBLY

Part No.	Quantity	Description
D2729-1	1	PRODUCT ID LABEL
D3320-041	1	WEBBING
D3325-1	2	END TUBE
D3325-3	3	INTERIOR TUBE
D3325-5	2	FULL LENGTH TUBE
D3328-1	2	HINGE PLATE
D3349-1	2	SPACER BUSHING
D3351-1	1	PLACARD
D3352-1	1	LABEL PLATE
D3367-1	2	MOUNTING BRACKET
MS20600AD4W3	32	RIVET
AN960JD9	32	WASHER

RELEASED 05.04.28 DEO ATTACHED

B	05.04.25	CHANGE RIVET AND HOLE DIAMETER
A	04.10.21	NEW ISSUE

COPYRIGHT © 2004 BY DART AEROSPACE LTD.

THIS DOCUMENT IS PRIVATE AND CONFIDENTIAL AND IS SUPPLIED ON THE EXPRESS CONDITION THAT IT IS NOT TO BE USED FOR ANY PURPOSE OR COPIED OR COMMUNICATED TO ANY OTHER PERSON WITHOUT WRITTEN PERMISSION FROM DART AEROSPACE LTD.

DESIGN	DRAWN BY	DART AEROSPACE LTD. HAMMERSBURY, ONTARIO, CANADA	
CHECKED	APPROVED	DRAWING NO. D3325	REV. B SHEET 1 OF 3
DATE 05.04.25		TITLE BASKET LID ASSEMBLY	SCALE 1:20

Dart Aerospace Ltd

W/O:		WORK ORDER CHANGES					
DATE	STEP	PROCEDURE CHANGE	By	Date	Qty	Approval Chief Eng / Prod Mgr	Approval QC Inspector

Part No: _____ PAR #: _____ Fault Category: _____ NCR: Yes No DQA: _____ Date: _____

Resolution: _____ Disposition: _____ QA: N/C Closed: _____ Date: _____

NCR:		WORK ORDER NON-CONFORMANCE (NCR)						
DATE	STEP	Description of NC Section A	Corrective Action Section B			Verification Section C	Approval Chief Eng	Approval QC Inspector
			Initial Chief Eng	Action Description Chief Eng	Sign & Date			

NOTE: Date & initial all entries

H:\fFORMS\Quality Assurance\approved QA\NCRWO RevE

DESIGN	DRAWN BY	DART AEROSPACE LTD HAWKESBURY, ONTARIO, CANADA	
CHECKED	APPROVED	DRAWING NO. D3325	REV. B SHEET 2 OF 3
DATE 05.04.25		TITLE BASKET LID ASSEMBLY	SCALE 1:4

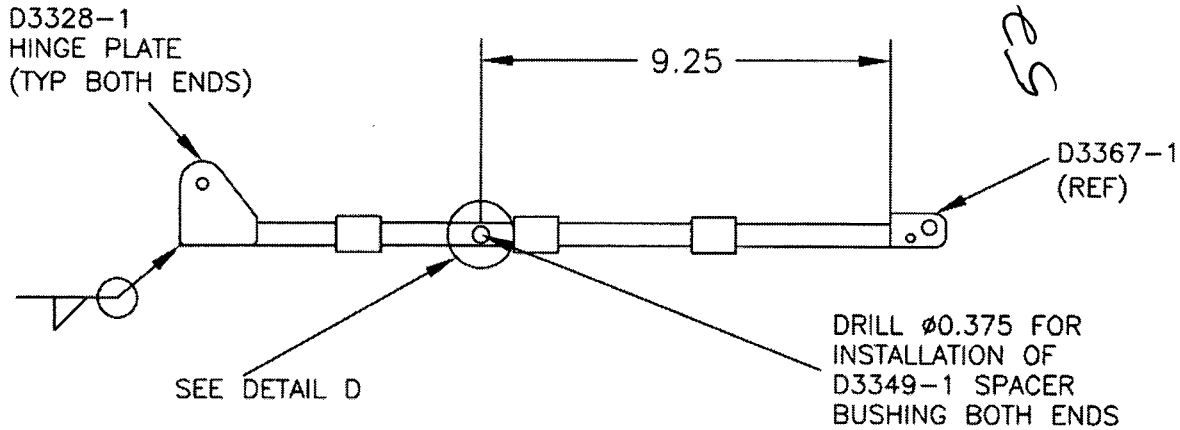

VIEW A-A

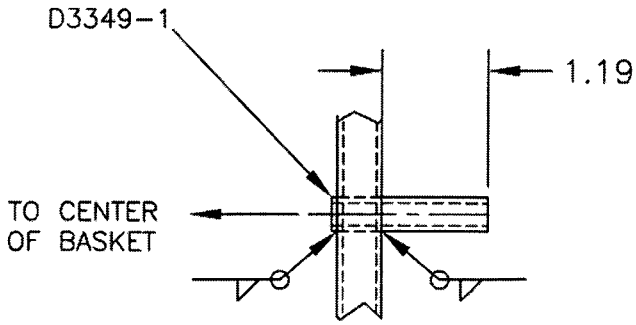

DETAIL D
(SCALE 1:2)

DEO ATTACHED

RELEASED 05.04.28

Copyright © 2004 by DART AEROSPACE LTD

THIS DOCUMENT IS PRIVATE AND CONFIDENTIAL AND IS SUPPLIED ON THE EXPRESS CONDITION THAT IT IS NOT TO BE USED FOR ANY PURPOSE OR COPIED OR COMMUNICATED TO ANY OTHER PERSON WITHOUT WRITTEN PERMISSION FROM DART AEROSPACE LTD.

Dart Aerospace Ltd

W/O:		WORK ORDER CHANGES					
DATE	STEP	PROCEDURE CHANGE	By	Date	Qty	Approval Chief Eng / Prod Mgr	Approval QC Inspector

Part No: _____ **PAR #:** _____ **Fault Category:** _____ **NCR:** Yes No **DQA:** _____ **Date:** _____

Resolution: _____ **Disposition:** _____ **QA: N/C Closed:** _____ **Date:** _____

NCR:		WORK ORDER NON-CONFORMANCE (NCR)						
DATE	STEP	Description of NC Section A	Corrective Action Section B			Verification Section C	Approval Chief Eng	Approval QC Inspector
			Initial Chief Eng	Action Description Chief Eng	Sign & Date			

NOTE: Date & initial all entries

H:\fFORMS\Quality Assurance\approved QA\NCRWO RevE

DESIGN	DRAWN BY	DART AEROSPACE LTD HAWKESBURY, ONTARIO, CANADA	
CHECKED	APPROVED	DRAWING NO. D3325	REV. B SHEET 3 OF 3
DATE 05.04.25		TITLE BASKET LID ASSEMBLY	SCALE 1:4

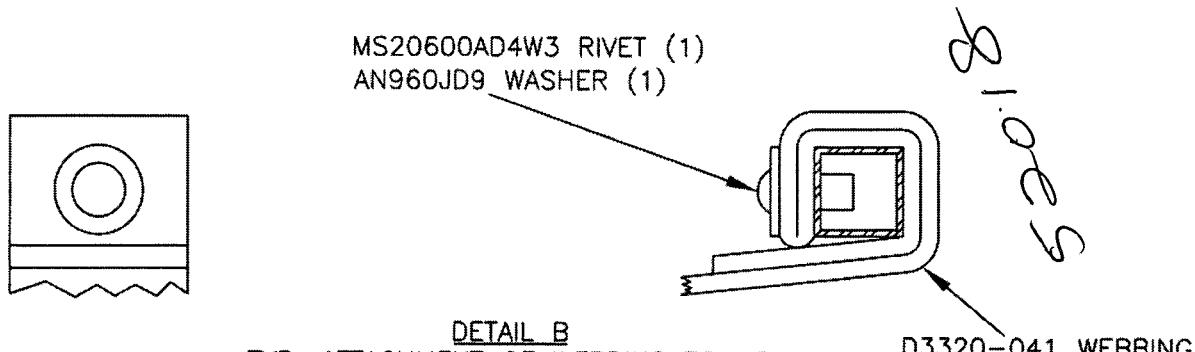

DETAIL B
TYP. ATTACHMENT OF WEBBING TO LID FRAME
(SCALE 1:1)

RELEASED
05.04.28
DEO ATTACHED

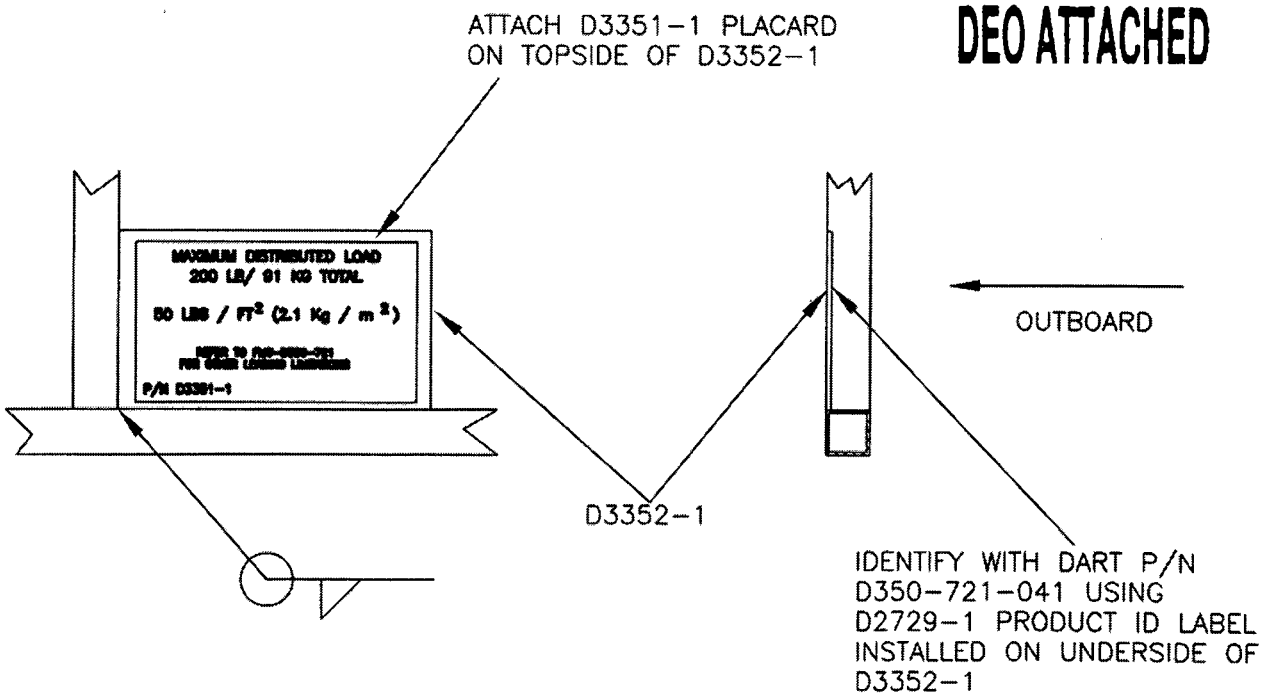

DETAIL C
LABEL PLATE ATTACHMENT
(SCALE 1:2)

Copyright © 2004 by DART AEROSPACE LTD
THIS DOCUMENT IS PRIVATE AND CONFIDENTIAL AND IS SUPPLIED ON THE EXPRESS CONDITION THAT IT IS NOT TO BE USED FOR ANY PURPOSE OR COPIED OR COMMUNICATED TO ANY OTHER PERSON WITHOUT WRITTEN PERMISSION FROM DART AEROSPACE LTD.

Dart Aerospace Ltd

W/O:		WORK ORDER CHANGES					
DATE	STEP	PROCEDURE CHANGE	By	Date	Qty	Approval Chief Eng / Prod Mgr	Approval QC Inspector

Part No: _____ **PAR #:** _____ **Fault Category:** _____ **NCR:** Yes No **DQA:** _____ **Date:** _____

Resolution: _____ **Disposition:** _____ **QA: N/C Closed:** _____ **Date:** _____

NCR:		WORK ORDER NON-CONFORMANCE (NCR)						
DATE	STEP	Description of NC Section A	Corrective Action Section B			Verification Section C	Approval Chief Eng	Approval QC Inspector
			Initial Chief Eng	Action Description Chief Eng	Sign & Date			

NOTE: Date & initial all entries

H:\fFORMS\Quality Assurance\approved QA\NCRWO RevE

DRAWING NO.	TITLE	REV. B	DART AEROSPACE LTD ENGINEERING ORDER	D.E.O. NO.	SHEET NO.	SCALE
D3325	BASKET LID ASSEMBLY			D3325-B-1	SHEET 1 OF 1	NTS

DRAWN	CHECKED	MFG. APPR.	APPROVED	DE APPR.
AJS				
DATE 08.11.28	DATE 08.11.28	DATE 08.12.01	DATE 08.12.01	DATE 08.12.01

1) SHEET 1 MODIFY PARTS LIST AS SHOWN:

PART LIST FOR D3325-041 BASKET LID ASSEMBLY

Part No.	Quantity	Description

IS:

MS20600AD4W5	32	RIVET

WAS:

MS20600AD4W3	32	RIVET

2) UPDATE SHEET 3 DETAIL B ACCORDINGLY.

52018

COPYRIGHT © 2008 BY DART AEROSPACE LTD
THIS DOCUMENT IS PRIVATE AND CONFIDENTIAL AND IS SUPPLIED ON THE EXPRESS CONDITION THAT IT IS NOT TO BE USED FOR ANY PURPOSE OR COPIED OR COMMUNICATED TO ANY OTHER PERSON WITHOUT WRITTEN PERMISSION FROM DART AEROSPACE LTD.

Dart Aerospace Ltd

W/O:		WORK ORDER CHANGES					
DATE	STEP	PROCEDURE CHANGE	By	Date	Qty	Approval Chief Eng / Prod Mgr	Approval QC Inspector

Part No: _____ **PAR #:** _____ **Fault Category:** _____ **NCR:** Yes No **DQA:** _____ **Date:** _____

Resolution: _____ **Disposition:** _____ **QA: N/C Closed:** _____ **Date:** _____

NCR:		WORK ORDER NON-CONFORMANCE (NCR)						
DATE	STEP	Description of NC Section A	Corrective Action Section B			Verification Section C	Approval Chief Eng	Approval QC Inspector
			Initial Chief Eng	Action Description Chief Eng	Sign & Date			

NOTE: Date & initial all entries

H:\fFORMS\Quality Assurance\approved QA\NCRWO RevE